NOVUS IMAGING
AN M&R COMPANY

GET TO KNOW **NOVUS**

NOVUS IMAGING
TRI-LOBAL UNIBODY MEDIA TRANSPORT BELT SYSTEM

PATENTED MEDIA TRANSPORT DESIGN

This system is a unique approach to a media transport system for an ink jet printer. In previous systems the belt transport system had 2 rolls with a belt stretched between them. In the case where the media transport belt in use was perfectly square this worked fine. But inevitably the belts used are almost never square due to the manufacturing processes involved with making them. The difficulty came in that in order for the belt to track properly and not run off the end of the assembly, the belt needed to have a consistent tension across the width of the belt.

In order to accomplish this with a belt that was not perfectly square one of the rolls, typically called a tension roll, would have to be skewed in relation to the second roller, typically called the stationary roller, to provide consistent tension across the belt. This method solved the technical challenge of the belt trying to work its way off the end of the assembly but it introduced another more difficult problem. Now the 2 rollers are no longer perpendicular to the media that is being transported by the system and it begins to skew and wrinkle making it very difficult to print on because of the danger of head strikes. This new patented design alleviates both of these issues.

Tri-Lobal design

Adding a third lobe, in the form of a tensioning roller, corrects for any irregularities in the squareness of the belt while leaving the two primary rolls perfectly parallel to allow for accurate media tracking.

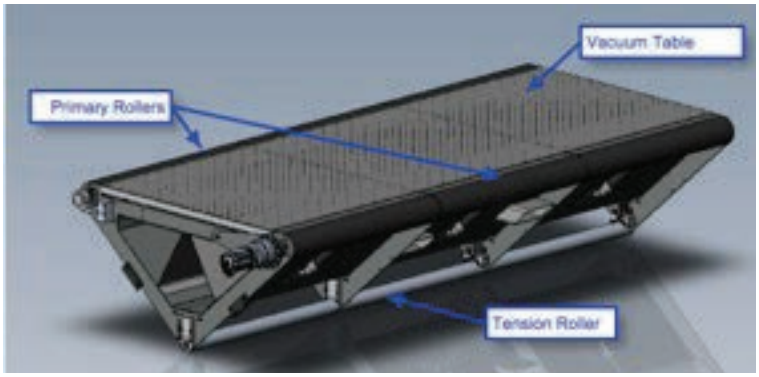

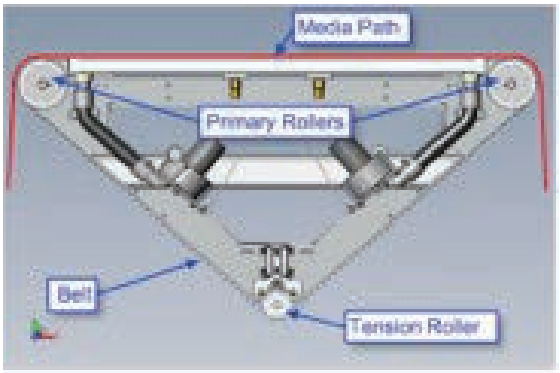

The two sets primary rollers can be arranged perfectly parallel allowing for a true media path. The third roll can then be used to tension the belt and can be angled slightly in an area outside the media path allowing for uniform tension across the belt without corrupting the straightness of the belt in the media path area. This allows for very accurate media tracking.

The Pneumatic Belt Tensioning System

This feature maintains a constant tension on the belt.This is accomplished by using a plurality of pneumatic air cylinders connected to a single air source regulated to provide the proper pressure resulting in the specified tension being applied to the belt.

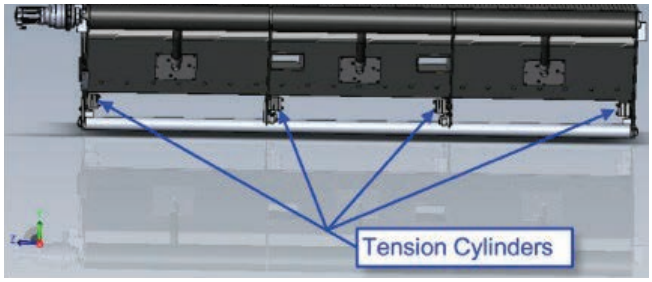

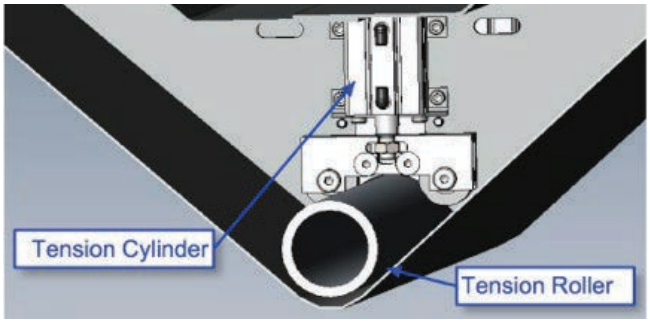

Uni-Body Support Frame Design

The support framework of this Tri-Lobal Media Transport system is a unique unibody construction design that requires no external frame structure and when it is bolted into the frame system it becomes a integral structural member of the system.

A welded frame structure of sheet metal and structural plates, form a support tunnel and rib system allowing for the support of the media transport system in such a manor as to restrict flexing and twist and allow for very precise alignment and straitness of the rollers that control the media path.

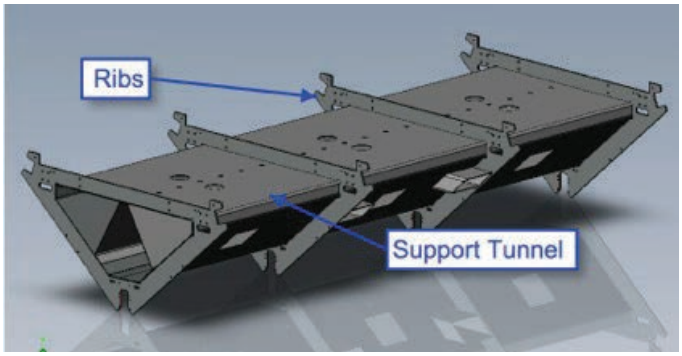

Overall this is one of the most innovative hybrid media transport systems available in the market today. It provides rigidity and precision at a level not seen before in this space.